REV.	RELEASE NO	DATE	DRAWN	APP
1	05-4897	11/22/05	GJR	ABR
2	06-5091	04/06/06	AIL	ABR
3	N06-5239	10/10/06	AIL	

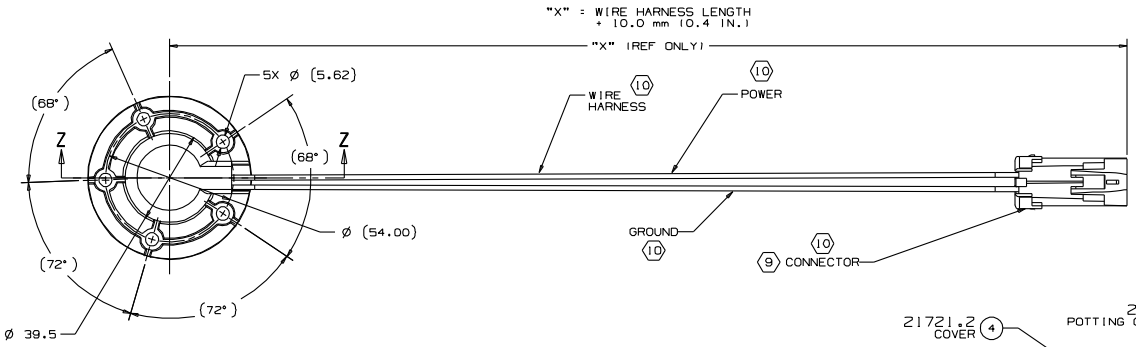

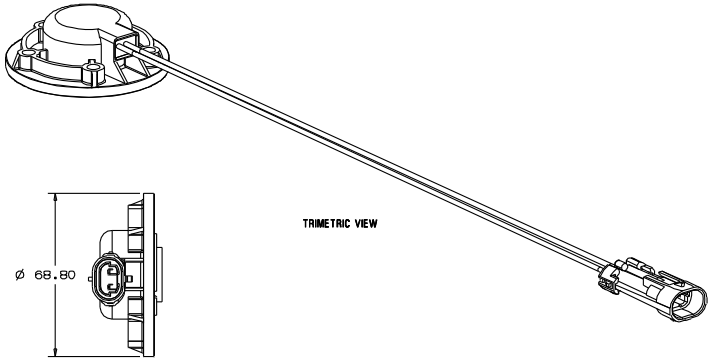

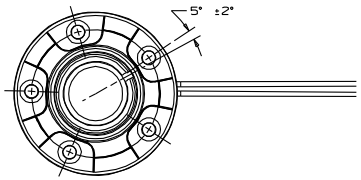

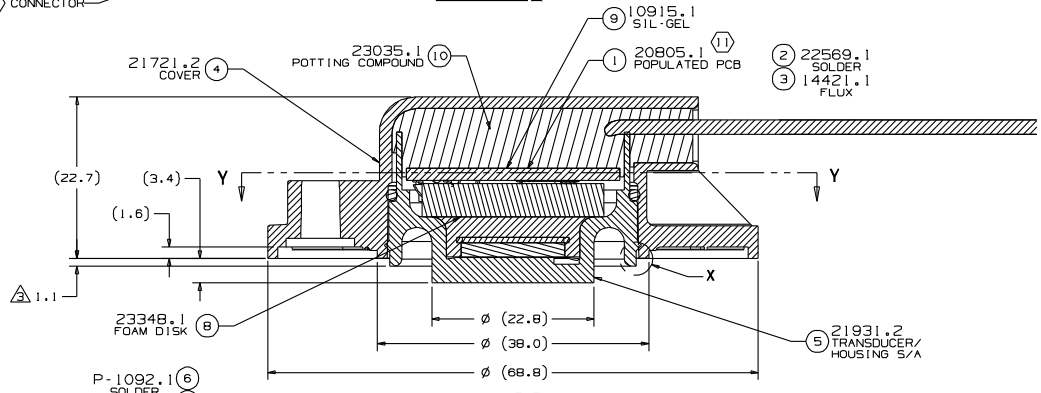

SECTION Z-Z
SCALE 3:1

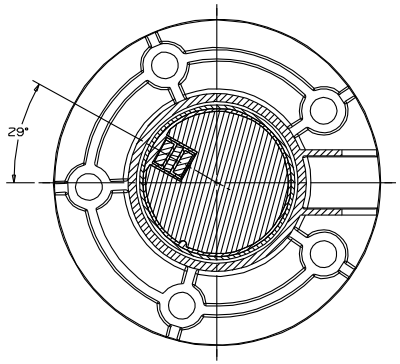

SECTION Y-Y
SCALE 2:1

2 PARTS INCLUDED IN KIT - NOT SHOWN
11 P1403.1
GASKET

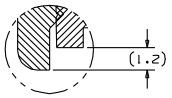

DETAIL X
SCALE 8:1 3

DAY OF YEAR
(1-365)

05 124 0136

TWO DIGIT YEAR

SERIAL No
(1-9999)

NOTES:

1) PART NUMBER AND DATE CODE TO BE LASER ETCHED INTO TOP OF PART. DATE CODE EXAMPLE: 05124 0136 = 136 th PART PRODUCED ON MAY 4, 2005
2) INPUT VOLTAGE RANGE: 10-18 VOLTS.
3) SEE SSI INSTALLATION RECOMMENDATION MANUAL FOR FURTHER INFORMATION.
4) CT X SPECIFIES KEY CHARACTERISTICS. O USED
5) ASSEMBLY TO MEET TEST REQUIREMENTS PER 21933.0 SPI.
6) CURE POTTING COMPOUND TO 80±5 SHORE D HARDNESS.
7) SENSOR WILL FIT FUEL TANK MOUNTING HOLE PER SAE J1810 OR EQUIVALENT
8) REFER TO CATALOG FOR CONFIGURED PART NUMBER STRUCTURE
9) CONNECTOR OPTIONAL - CUT WIRE LEADS AVAILABLE UPON REQUEST
10) REFERENCE APPROPRIATE WIRE HARNESS PRINT FOR LENGTH, WIRE COLOR, CONNECTOR, ETC.
11) REFERENCE 22706.0 SPI FOR SOFTWARE OPTIONS.

MILLIMETERS		
TOLERANCE	.0	.00
DIA	±.2	±.13
LINEAR	±.2	±.13
ANGULAR	1°	
DO NOT SCALE PRINT		

THIS DRAWING REPRESENTS CONFIDENTIAL AND PROPRIETARY INFORMATION OF SSI TECHNOLOGIES INC AND SHALL NOT BE USED, ALTERED OR DISCLOSED IN WHOLE OR IN PART WITHOUT THE EXPRESS WRITTEN APPROVAL OF SSI TECHNOLOGIES INC. ANY USE OF THIS DRAWING SHALL BE SUBJECT TO SSI TECHNOLOGIES INC SUPPLIER QUALITY ASSURANCE SPECIFICATION SQA5001.

SSI Technologies, Inc

JOB: FLUID TRAC	DO NOT SCALE	ASSEMBLY NO: - - - - -	
NAME: FINAL SENSOR ASSEMBLY	3RD ANGLE PROJECTION	CUSTOMER I.D.	
MATERIAL: SEE BOM	REFER TO ASME Y14.5M-1994	DRWG NO: FT2-WITHOUT-TUBE	REV. 3
DWG SIZE: D / SHEET: 1 OF 1 / SCALE: 1:1 / VERSION: NX2	COMPUTER DRAWN NO MANUAL CHANGE		

A B C D E F G H J K L M
N P Q R S T U V W X Y Z